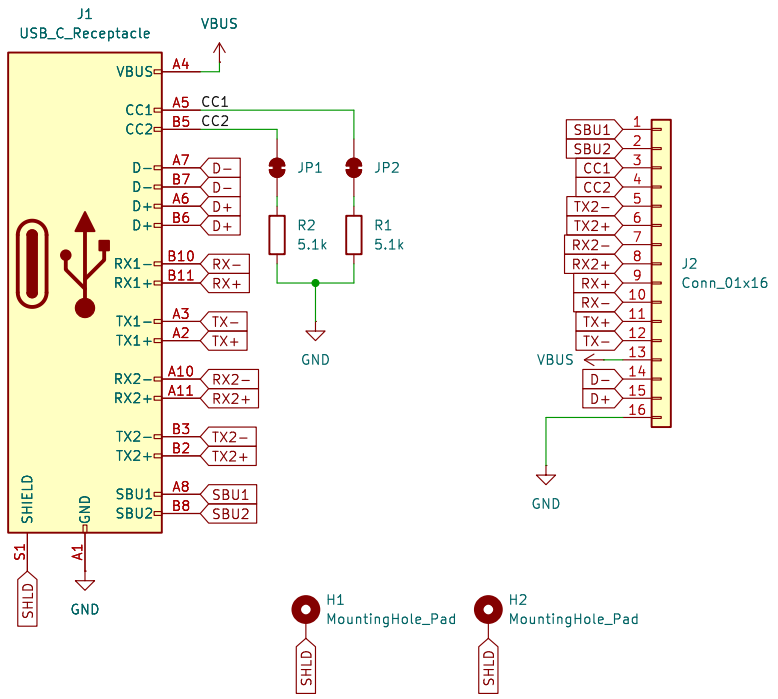

Circuitneato

Released under the Creative Commons
Attribution Share-Alike 4.0 License
https://creativecommons.org/licenses/by-sa/4.0/deed.en

Title: USB-C 3.2 Horizontal

Designed By: Patrick Mathern

Date: 2026-03-18	Rev: V1	Sheet: 1/1